UNAUTHORIZED USE OF THIS DRAWING IS STRICTLY PROHIBITED

| DAR | REV | DESCRIPTION | APPVD | DATE |
|---|---|---|---|---|
| 2970 | D | SEE DAR | TJD | 3–11 |
| 5143 | E | SEE DAR | DG | 9–14 |
| 6775 | F | SEE DAR | DG | 6–17 |

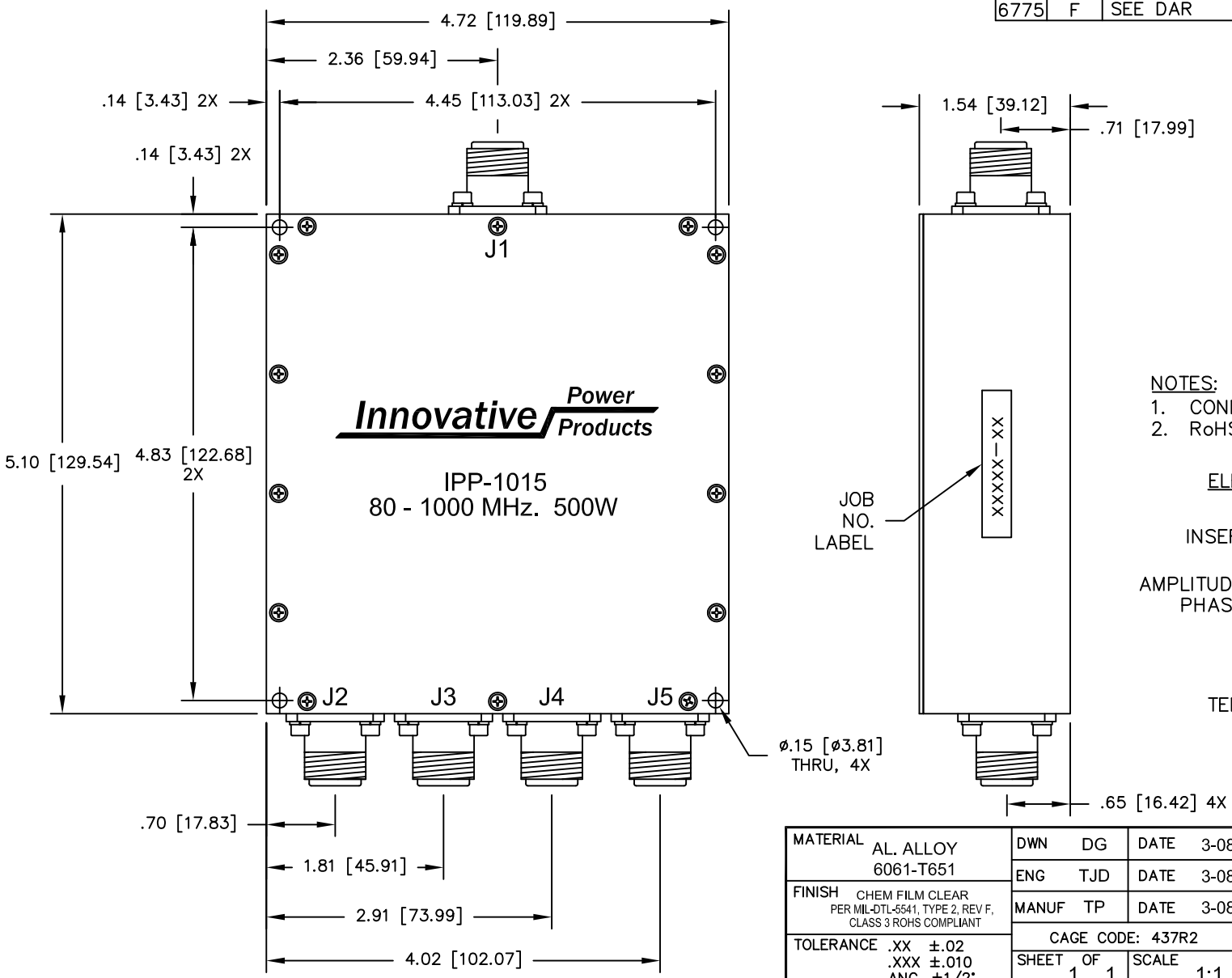


NOTES:
1. CONNECTORS: J1 – J5 TYPE "N" FEMALE.
2. RoHS COMPLIANT.

ELECTRICAL SPECIFICATIONS

| | |
|---|---|
| FREQUENCY: | 80 – 1000 MHz. |
| INSERTION LOSS: | < 0.75 dB |
| VSWR: | < 1.30:1 |
| AMPLITUDE BALANCE: | ±0.25 dB |
| PHASE BALANCE: | ±5° |
| POWER: | 500 WATT |
| ISOLATION: | >12 dB 80–125 MHz |
| | >15 dB 125–1000 MHz |
| TEMPERATURE: | –55°C TO 85°C |

| | | | |
|---|---|---|---|
| MATERIAL AL. ALLOY 6061-T651 | DWN DG | DATE 3-08 | Innovative Power Products |
| FINISH CHEM FILM CLEAR PER MIL-DTL-5541, TYPE 2, REV F, CLASS 3 ROHS COMPLIANT | ENG TJD | DATE 3-08 | TITLE OUTLINE 4 - WAY 80 - 1000 MHz 500 WATT |
| | MANUF TP | DATE 3-08 | |
| TOLERANCE .XX ±.02 .XXX ±.010 ANG. ±1/2° | CAGE CODE: 437R2 | | |
| | SHEET 1 OF 1 | SCALE 1:1 | SIZE B · P/N IPP-1015 · REV. F |