Innovative Power Products

IPP-7164

Technical Data Sheet

90 Degree Coupler: 500 – 6000 MHz., 100 Watt, SMD

ELECTRICAL SPECIFICATIONS:

Frequency	500 – 6000 MHz.
Power	100 Watts CW
VSWR	1.70:1
Insertion Loss	<1.25 dB
Isolation	>13 dB
Phase Balance	+/- 8 Degrees
Amplitude Balance	+/- 1.70 dB
Operating Temperature	-55° to 85° C
Package Size (WxLxH)	0.500″ x 1.800″ x 0.158″
Export Classification	EAR99

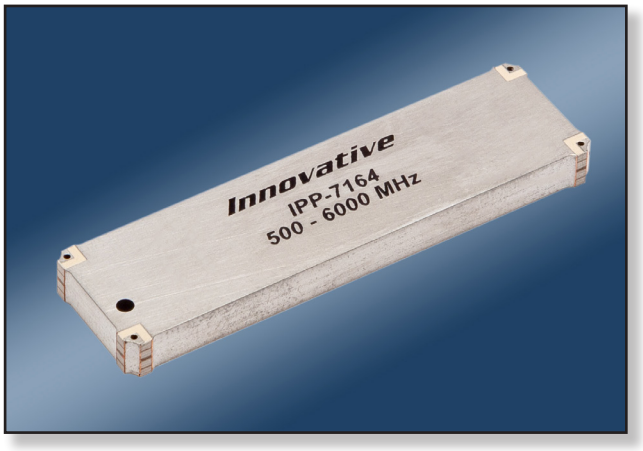

APPLICATIONS:

Test and Measurement

NOTES:

Plating for standard product is Tin/Lead.
Also available in RoHS Matte Tin (IPP-7164RT).
All models available on tape and reel.

DIMENSIONAL DRAWING

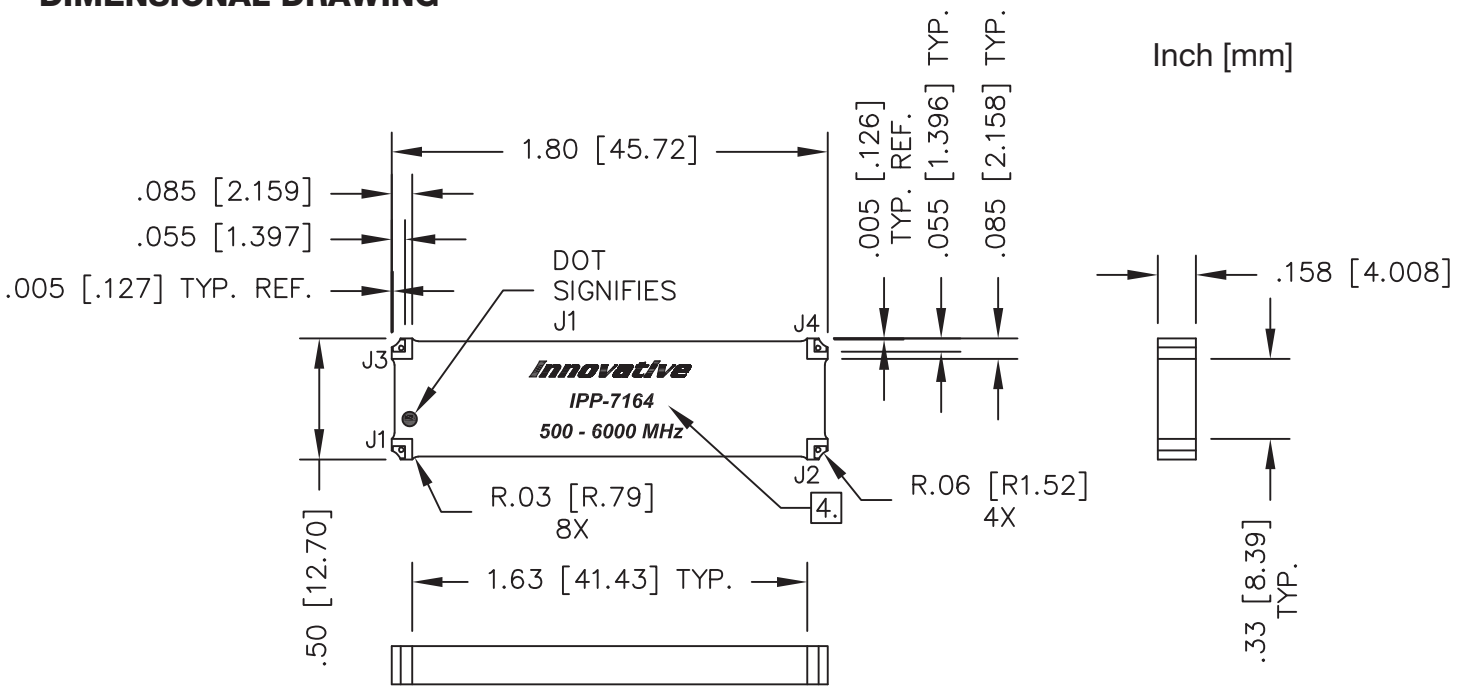

Innovative Power Products, Inc. • Phone: 631-563-0088 • Web: www.innovativepp.com
1170-8 Lincoln Avenue, Holbrook, New York 11741 • Email: info@innovativepp.com

VSWR

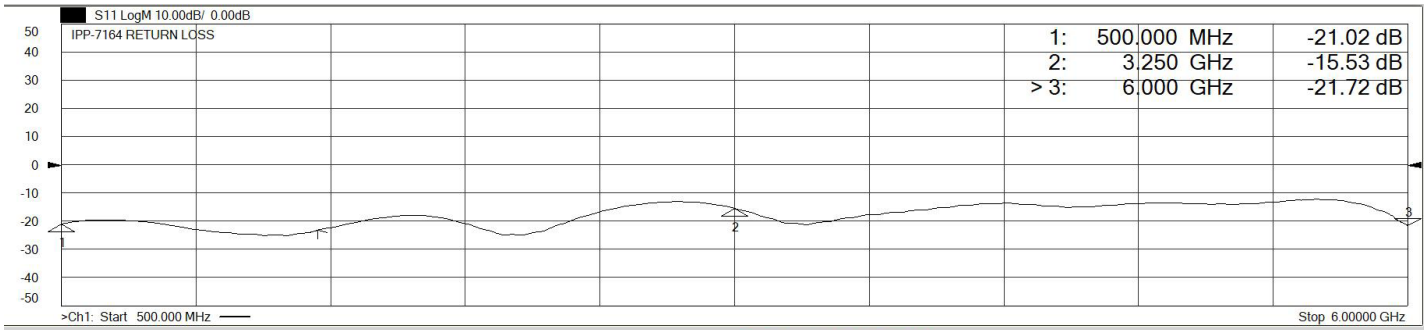

Amplitude Balance

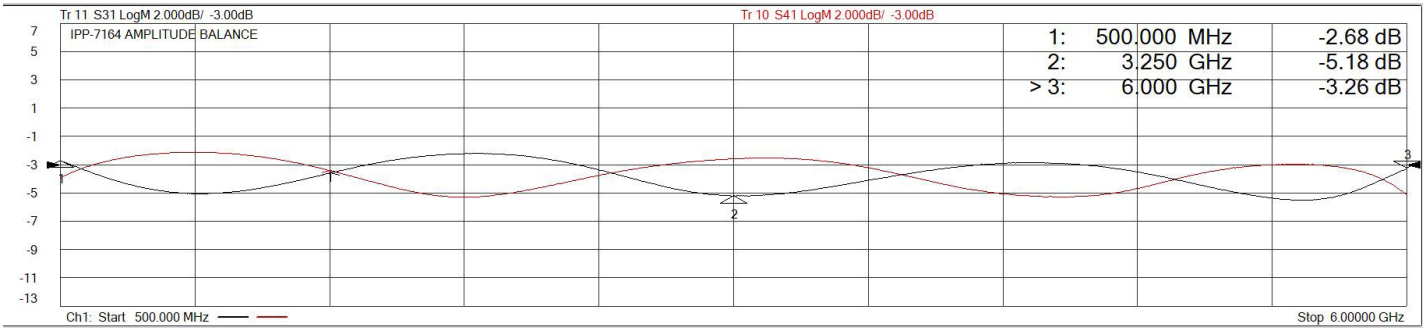

Isolation

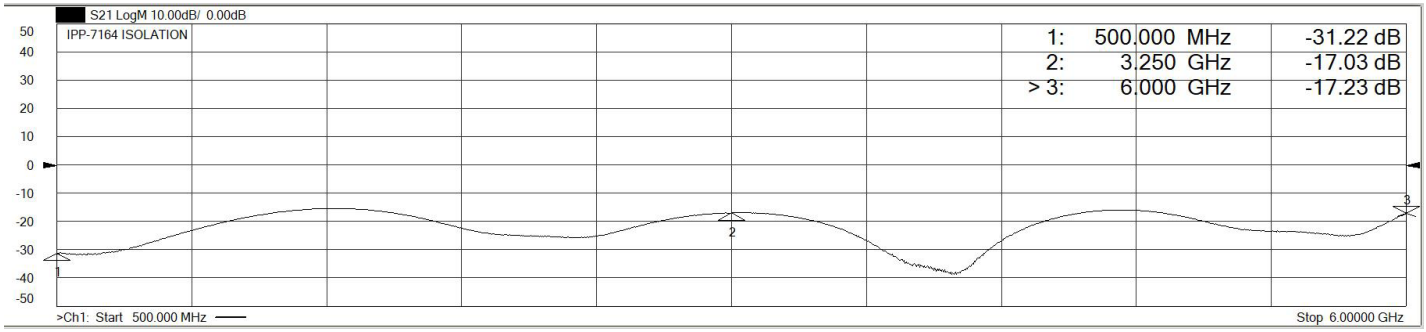
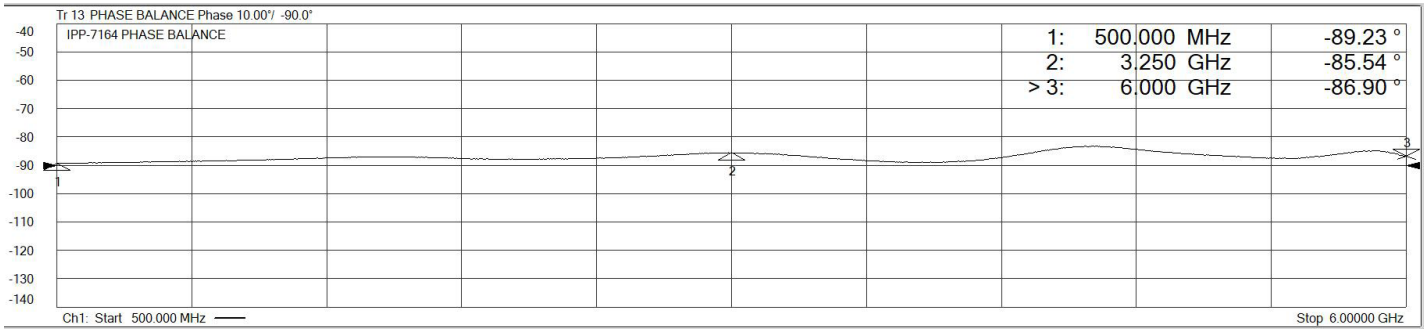
Phase Balance